Offshore Air Winches

OAW/OMR series

A range of compact lifting and pulling air winches specially designed for offshore applications or for any other hazardous environment where space is limited.
The heavy duty planetary gearbox is mounted within the drum core, which both saves space and protects from any external damage. Winches designed to meet independent third party requirements such as Lloyds, ABS, etc. These standard winches can be fitted with several options and accessories. Two of the winches are manriding prepared.

Standard features

- OAW: utility lifting
- OMR: manriding prepared
- OAW LV: rotary vane motor including (biased) throttle valve
- OAW/OMR GP: contact less maintenance free gear motor including (biased) throttle valve
- Heavy duty planetary gearbox integrated in gearbox
- Exhaust silencing mufflers
- Cable fixing point at flange
- Two drum supports
- Standard temperature range -10° to +40°C
- Automatic disc brake
- Three layer 2-component conservation according ISO 12944 category C4-High, colour RAL 1023
- FEM / ISO class: T4-L3-M5

Available options

- Marine / offshore coating systems
- Alternative drum lengths
- Drum pressure rollers
- Drum guards
- Drum locking pins
- Drum dividers
- Band brakes (manual or automatic failsafe)
- Manual disengaging clutches (only allowed for pulling applications)
- Spooling gears
- Grooved drums
- Manriding package
- Third party certification (LRS, ABS, etc)
- ATEX Certificate

Available control options

- Emergency main shut-off valves
- Load limiters
- Limit switches (pneumatic)
- Slack wire switches (pneumatic)
- Proportional remote control valve
- Air service units

Winch type	WLL 1st layer kg	WLL 5th layer kg	Recomm. Rope diam. mm	Average speed* m/min.	Maximum speed** m/min.	Drumcap. 5th layer m	Pressure drop in bar	Flow in l/sec.
OAW 1.5 LV	1955	1500	12	20	24	178	6.5	150
OAW 2.0 LV	2655	2000	13	14	17	167	6,5	150
OAW 2.5 LV	3500	2500	16	10	12	144	6,5	150
OAW 2.5 GP10	3500	2500	16	19	36	144	7	300
OAW 2.5 GP16	3500	2500	16	30	67	144	7	350
OMR 1.5 GP10	2000	1500	13	30	54	171	6	300
OAW 3.5 GP10	4850	3500	18	14	26	181	7	300
OAW 3.5 GP16	4850	3500	18	21	46	181	7	350
OAW 5.0 GP10	6800	5000	19	10	19	212	7	300
OAW 5.0 GP16	6800	5000	19	15	36	212	7	350
OMR 3.0 GP10	4280	3150	19	14	25	212	6	300
OAW 6.5 GP10	9180	6500	22	7	14	209	7	300
OAW 6.5 GP16	9180	6500	22	12	28	209	7	350
OAW 7.0 GP16	9885	7000	22	10	22	209	7	350
OAW 8.5 GP16	12160	8500	26	8.5	20	228	7	350
OAW 10.5 GP16	14890	10500	28	7	16	244	7	350

* Average speed is based on the speed in the middle layer at 75% of WLL
** Maxiumum speed is based on the speed in the top layer at unloaded conditions

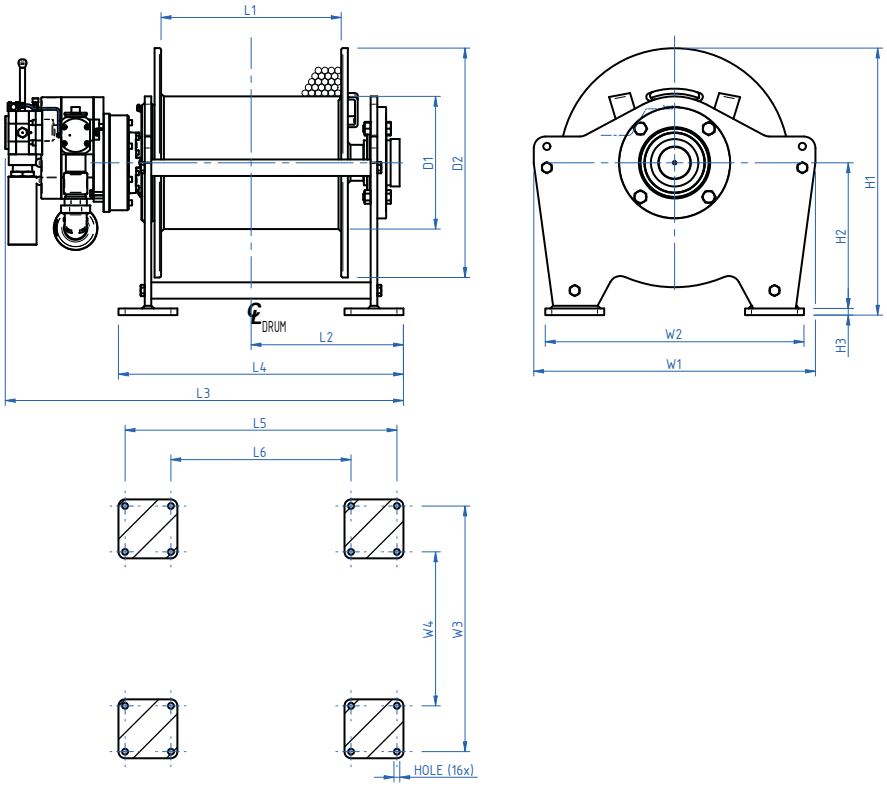

FOOTPRINT -TOP VIEW- A-A

OAW 1.5 LV

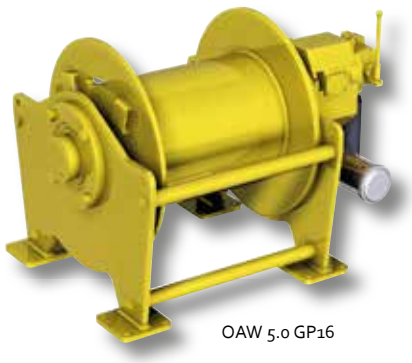

OAW 5.0 GP16

Type	Mass kg	D1	D2	L1	L2	L3 (LV)	L3 (GP)	L4	L5	L6	H1	H2	H3	W1	W2	W3	W4	HOLE
OAW 1.5	355	305	500	400	322	940	876	625	595	375	650	345	15	660	550	520	300	14
OAW 2.0	420	305	500	400	360	994	930	680	640	400	615	345	20	660	570	530	290	14
OAW 2.5	665	305	550	410	375	1014	1092	700	660	420	665	370	20	710	620	580	340	14
OMR 1.5	705	305	550	410	375	-	1202	810	770	530	665	370	20	850	620	580	340	14
OAW 3.5	840	355	700	500	430	-	1169	810	770	490	815	445	20	860	790	750	470	18
OAW 5.0	820	405	700	550	465	-	1216	870	830	550	815	445	20	860	790	750	470	18
OMR 3.0	860	405	700	550	465	-	1326	980	940	660	815	445	20	1000	790	750	470	18
OAW 6.5	1180	405	750	610	528	-	1333	980	930	630	870	470	25	950	860	810	510	26
OAW 7.0	1185	405	750	610	528	-	1353	980	930	630	870	470	25	950	860	810	510	26
OAW 8.5	1270	455	850	690	582	-	1452	1075	1025	725	970	520	25	1050	960	910	610	26
OAW 10.5	1585	508	950	720	623	-	1545	1140	1090	750	1070	570	25	1150	1080	1030	690	26